Alle Rechte vorbehalten/ *All rights reserved*

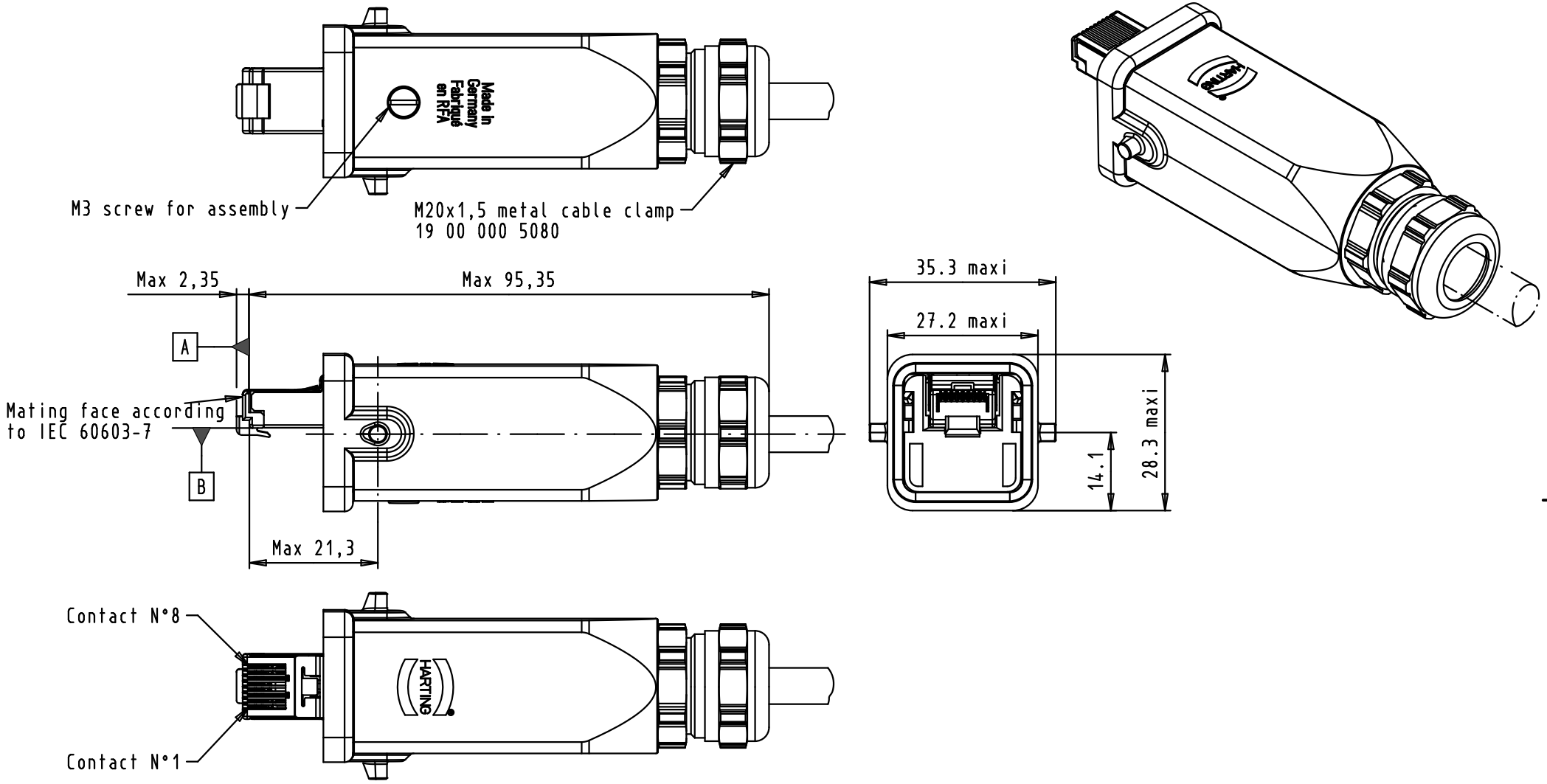

Cables outer diameter 6.5 up to 9.5 mm
Stranded wire AWG 28/7-24/7

Part number	Color wire manager	Mod.	Dat.	Name
09 45 115 1512	Blue	EC01089	06/01/10	AB
09 45 115 1502	White	31869	17/02/04	AF
		36301	16-05-11	SD

	Dat.	Name
Detail.	17/02/04	AF
Insp.	16-05-11	JMDV
Stand.		

All Dim. in mm
Orig. Size DIN A 4

HARTING EURL
F-95972 Paris

RJ-Industrial
IP67 data plug metal version M HAN 3A shielded with 8 data contacts

TB 09 45 115 15X2

Sub.

Maßstab/ *Scale* 1:1

Blatt/ *Page* 1/1